SA WALL BOX

Standard

- Comply with ANSI/EIA RS-310-D、IEC60297-2、DIN41494;PART1; DIN41494; PART7

Material

- SPCC Cold Rolled Steel;
- Thickness: 19" rails: 1.5mm, side panel 1.0mm, others: 1.2mm

Colour

- SA ■■■■■0■■:RAL7035
- SA ■■■■■1■■:RAL9004

Loading Capacity

- Static loading: 60KG

HTTP://WWW.NBHISUN.NET

WALL BOX
SA SINGLE SECTION

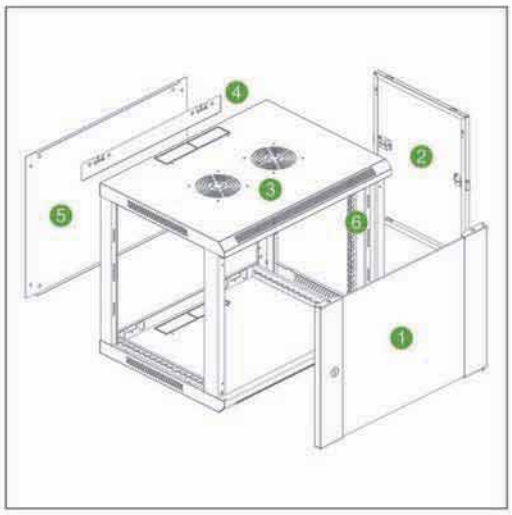

Feature

- Welded frame, reliable structure;
- Standing or wall mounting installation;
- Adjustable feet and heavy duty castors are optional;
- Easy mounting installation（patent）;
- 19" standard installation;
- Removable side panels, side locks optional
- Cable entry on both of top cover and bottom panel;
- 120mm fan available;
- Turning angle of front door is over 180 degrees

Definition Of Code

■ ■ ■ ■ ■ ■ ■ ■ ■ 00

Definition of rear door:
0-Tempered glass door;
1-Tempered glass door with striped hole;
2-Tempered glass door with hexagon hole;
3-Sheet steel door
4-Sheet steel door with hexagon hole;
5-High-density vented door;

Main Part

S/N	Specification	Qty	Material	Surface Finish	Remark
1	Front door	1	5MM toughed glass door/ SPCCt1.2	Powder coated	May choose the fitting, See page 86
2	Side panel	2	SPCC t1.0	Powder coated	----
3	Frame	1	SPCC t1.2	Powder coated	----
4	Mounting profile	1	SPCC t1.2	Powder coated	----
5	Back panel	1	SPCC t1.0	Powder coated	----
6	19" rails	4	SPCC t1.2	Powder coated	----
A	M6 screw& nuts	10	Steel	Color zinc	20pcs for over 12U
B	Trox tooling	1	Steel	Black	----

Specification

Model No.	RU	Width (mm)	Depth(D)(mm)	Height(H)(mm)	Packing dimension (mm)
SA.6406.01.■00	6	600	450	370	620*470*390
SA.6606.01.■00			600		620*620*390
SA.6409.01.■00	9	600	450	500	620*470*520
SA.6609.01.■00			600		620*620*520
SA.6412.01.■00	12	600	450	635	620*470*650
SA.6612.01.■00			600		620*620*650
SA.6415.01.■00	15	600	450	770	620*470*790
SA.6615.01.■00			600		620*620*790
SA.6418.01.■00	18	600	450	900	620*470*920
SA.6618.01.■00			600		620*620*920
SA.6422.01.■00	22	600	450	1080	620*470*1100
SA.6622.01.■00			600		620*620*1100