SB WALL BOX

Standard

- Comply with ANSI/EIA RS-310-D、IEC60297-2、DIN41494;PART1; DIN41494; PART7

Material

- SPCC Cold Rolled Steel;
- Thickness: 19" rails: 1.2mm, side panel 1.0mm, others: 1.2mm

Colour

- SB ■■■■0■■:RAL7035
- SB ■■■■1■■:RAL9004

Loading Capacity

- Static loading: 30KG

HTTP://WWW.NBHISUN.NET

WALL BOX
SB DOUBLE SECTION

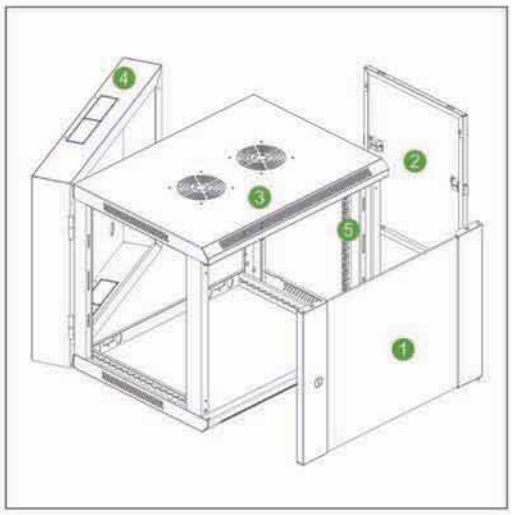

Feature

- Double section welded frame structure;
- Easy operation and maintaining at the back;
- 19" standard installation;
- Removable side panels, side locks are optional, easy installing and maintaining;
- Cable entry at the top cover and bottom panel;
- 120mm fan optional;
- Turning angle of front door is above 180 degrees;
- Turning angle of rear door is above 90 degrees.

Definition Of Code

■ ■ ■ ■ ■ ■ ■■ ■ 00

Definition of rear door:
0-Tempered glass door;
1-Tempered glass door with striped hole;
2-Tempered glass door with hexagon hole;
3-Sheet steel door
4-Sheet steel door with hexagon hole;
5-High-density vented door;

Main Part

S/N	Specification	Qty	Material	Surface Finish	Remark
1	Front door	1	5MM toughed glass door/ SPCCt1.2	Powder coated	May choose the fitting, See page 86
2	Side panel	2	SPCC t1.0	Powder coated	----
3	Front frame	1	SPCC t1.2	Powder coated	----
4	Back frame	1	SPCC t1.2	Powder coated	----
5	19" rails	4	SPCC t1.2	Powder coated	----
A	M6 screw& nuts	10	Steel	Color zinc	----
B	Trox tooling	1	Steel	Black	20pcs for over 12U

Specification

Model No.	RU	Width (mm)	Depth(D)(mm)	Height(H)(mm)	Packing dimension (mm)
SB.6506.02.■00	6	600	550	370	620*570*390
SB.6509.02.■00	9	600	550	500	620*570*520
SB.6512.02.■00	12	600	550	635	620*570*650
SB.6515.02.■00	15	600	550	770	620*570*790
SB.6518.02.■00	18	600	550	900	620*570*920
SB.6522.02.■00	22	600	550	1080	620*570*1100